GeoSystems Analysis, Inc.
Innovations in Hydrology

October 15, 2013

Cyrus Miller, P.E. and John Wallace, P.E.
JE Fuller/Hydrology & Geomorphology, Inc.
40 East Helen Street
Tucson, Arizona 85705

Re: Palominas Flood Control and Recharge Facility – Proposed Monitoring Plan

Dear Cyrus and John,

Please find attached the final version of the Proposed Monitoring Plan for the Palominas Flood Control and Recharge Facility. The proposed plan is designed to quantify the amount of stormwater captured by the facility, the amount of water that is recharged into the vadose zone, and to quantitatively compare the efficacy of in-channel basins, basins with dry wells and basins with infiltration trenches. The attached version has been revised to incorporate comments and revisions from the Project Team.

If you have any questions, please feel free to contact me at 520-405-3828 or Stephanie Moore at 505-235-9561.

Sincerely,

Michael Milczarek
Program Director

cc: Karen Riggs, Cochise County Highway & Floodplain Department
Kim Mulhern, Consultant to Cochise County Highway & Floodplain Department

3393 North Dodge Boulevard
Tucson, Arizona 85716
phone: 520-628-930
fax: 520-628-1122
WWW.GEOSYSTEMSANALYSIS.COM

1.0 INTRODUCTION AND BACKGROUND

Cochise County is developing the Palominas Flood Control and Recharge Facility in the Schoolhouse Wash Watershed. In addition to providing for flood control and stormwater capture, a major goal of this project is to recharge captured stormwater to the shallow alluvial aquifer for the purpose of augmenting streamflow in the upper San Pedro River to sustain its riparian habitat. JE Fuller Hydrology & Geomorphology, Inc. (JEF) has contracted with GeoSystems Analysis, Inc. to develop a monitoring plan, which is described herein.

The primary goals of the monitoring plan are (1) to evaluate the overall effectiveness of recharge at the project site and (2) to provide the necessary information to facilitate an effective adaptive management plan, whereby future phases of the Project are informed and improved by knowledge gained from the initial project phases. Associated goals of the monitoring plan include the following:

- Quantify infiltration rates and the estimated volume of water that recharges into the vadose zone at various locations throughout the facility.
- Compare recharge performance of (a) the detention basin, (b) in-channel basins, (c) in-channel basins with dry wells, and (d) and in-channel basins with infiltration trenches.
- Evaluate changes in recharge rates with time for each of the above features.
- Monitor water level changes in the shallow alluvial aquifer.
- Measure precipitation in the watershed.
- Evaluate factors affecting variability in recharge rates (i.e., clogging).

The Palominas project site is located in Cochise County near Palominas, Arizona, and includes (1) the parcel formerly known as the Mansker property, which is now owned by Cochise County and (2) the downstream drainage channel constructed and owned by Cochise County (Figure 1). JEF prepared 65-percent design plans in September 2012, to include the basic elements of a large stormwater capture basin (detention basin) located west of Palominas Road and thirteen in-channel basins in the downstream drainage channel located east of Palominas Road (Figure 1). This monitoring plan is intended as a supplemental document to the construction plans (65% plans were printed in September 2013); refer to final construction plans in case of any discrepancies.

Based on an analysis of alternatives to increase recharge (JEF, 2013), the following elements have been added to the site design (Figure 1):

- Two dry wells in each of three in-channel basins (Basins 2, 6 and 10). Two single-chambered dry wells would be placed in Basin 6; two dual-chambered dry wells would be placed in Basins 2 and 10. Dry wells would be drilled to approximately 10 feet above the water table and be at least three feet in diameter. Based on prior field reconnaissance (GSA, 2013a), water levels at Basins 2, 6 and 10 are approximately 34, 30 and 26 ft bgs (respectively); thus, the total depth of the dry wells adjacent to these basins is estimated to be 24, 20 and 16 ft bgs (respectively). Typical design details were provided by Torrent Resources (Phoenix, AZ) as shown in Figures 2a and 2b.

- Three infiltration trenches in select in-channel basins, with one trench in Basin 4 and two trenches in Basin 8. Trenches would be approximately 25 ft wide at the basin floor, 6 ft wide at depth, 6 ft deep and approximately 80 ft long; the trenches are oriented perpendicular to flow. Typical design details for Basin 8 were provided by JEF and also included here as an example of trench dimensions (Figure 3).

The dry wells and infiltration trenches are expected to: (a) provide additional storage capacity for each storm event, (b) increase recharge rates because of increased surface-area contact with higher permeability materials located slightly below land surface (GSA, 2013a), and (c) reduce losses to evapotranspiration. The placement of the dry wells and infiltration trenches was chosen to facilitate comparison of recharge rates between basic (unaltered) in-channel basins, basins with dry wells, and basins with an infiltration trench.

The proposed project (Figure 1) is designed to meet the primary project goals of flood control, stormwater capture, and recharge to the shallow alluvial aquifer. Once the facilities are constructed and recharge activities have commenced, the data collected as part of this proposed monitoring plan will provide valuable information to Cochise County and the Project Team regarding the most cost-effective methods for increasing recharge. This will facilitate an adaptive management approach, so that future project actions can be optimized based on observations made in this early phase of the project.

2.0 MONITORING DESIGN

Monitoring at the Palominas Recharge Project site will include measurement of the following items (Figure 1):

- Groundwater elevation at three monitoring wells within the recharge area and one upgradient (baseline) well
- At the detention basin and six in-channel basins (Basins 2, 4, 6, 8, 10, 12):

  - Surface flow into and out of each basin
  - Water levels in dry wells and infiltration trenches
  - Variations in soil conditions along a vertical profile adjacent to selected basins
- Variations in soil conditions at one upgradient (baseline) location

Precipitation will be measured directly at three locations within the Palominas watershed (Figure 4) to determine variability in precipitation throughout the watershed. Additionally, potential evapotranspiration (PET) data, including precipitation and temperature, from three nearby meteorological stations operated by the US Department of Agriculture (USDA) Agricultural Research Service (ARS) Southwest Watershed Research Center will be used for water budget calculations, in conjunction with data collected at Palominas facility.

The accumulation of sediment, especially fine-grained materials, is an important consideration for the Project. To optimize recharge rates, efforts should be made to minimize the accumulation of fine-grained materials, and to remove accumulated materials when possible. Although the accumulation of sediment will not be monitored directly, the components of this monitoring plan allow for indirect monitoring of sediment accumulation by observation of infiltration rates. An Operations and Maintenance Plan for the Project will be developed to include a prescribed action list of basin maintenance tasks (such as scarification and sediment removal) for various indicators based on the following:

- Visual observation of the basin conditions
- Reductions in infiltration rates observed from quarterly data review

Groundwater Monitoring

Groundwater levels will be measured in four monitoring wells (Figure 1). An existing well is located at the far eastern end of the drainage channel (Figure 1). The water levels in the existing well varied from 20 to 22 ft below ground surface (bgs) from March through September 2013 (Rice, 2013). Two additional monitoring wells will be installed at the far western side of the recharge basins and one in the middle of the basins; in addition a "baseline" monitor well will be installed west of the stormwater detention basin (Figure 1). Approximate locations are provided in Figure 1 and a typical cross-section schematic of a groundwater monitoring well is provided in Figure 5; however, final locations will depend on land ownership and access. The regional water table ranges from 18 to 34 ft bgs from the east to the west across the area of the recharge basins, and is 40 feet bgs west of the stormwater detention basin (Figure 1; GSA, 2013a). Thus, the new wells will be completed to total depths of approximately 28 to 50 ft bgs, with 20-ft screened intervals that intercept the water table. Groundwater levels will be measured and recorded four times per day

through use of a dedicated pressure transducer and datalogger assembly. Manual measurements of groundwater levels will be taken at least quarterly and will be used to calibrate the automated readings.

Additionally, there are two existing USGS monitoring wells near the project site: Site 312318110071901 (also known as the Firehouse Well) is located just north of the project site and Site 312214110071602 is located south and upgradient of the project site (Figure 4). Water levels in both USGS wells are measured manually several times per year. A pressure transducer measures and records water levels continuously at the southern/upgradient well. A pressure transducer will be installed in the Firehouse Well to collect continuous water level measurements. These data will be available for analysis in conjunction with water levels measured as part of this proposed monitoring plan.

Surface Water Monitoring

Surface water flow out of each in-channel basin will be measured through use of pressure transducers placed at the weir walls of each in-stream basin (Figures 1 and 6). Pressure transducers will be placed in stilling wells, which will be attached to the concrete weir walls located at the outlet of each in-channel basin (Figure 7); these data will be used to calculate flow from each basin. Additionally, a basic stilling well will be installed in the main detention basin (Figure 1) to measure water levels, which will be used to calculate the volume of water in the main basin.

Subsurface (Vadose Zone) Monitoring

Water movement into and through the vadose zone will be monitored through the use of instruments placed directly within drywells or infiltration trenches, and instruments in shallow boreholes completed adjacent to the basins. The depth of water (pressure head) will be measured at the bottom of each dry well and infiltration trench through the use of dedicated pressure transducers. Water levels will be measured and recorded at 15-minute increments to evaluate changes in infiltration rates with time during infiltration events over the course of the project.

Water movement into and through the vadose zone will be measured at instrumented boreholes placed adjacent to each of the instrumented basins and in one borehole located upgradient of the recharge areas (Figure 1). At each borehole, water content will be measured through use of automated monitoring equipment. Boreholes will be completed to approximately 5 ft above the regional water table, with total depths ranging from 14 to 29 ft bgs; typical cross-sections of Level 1 and Level 2 instrumented boreholes are presented in Figures 7 and 8. At Level 1 boreholes, volumetric water content (VWC) and temperature

will be measured; at Level 2 boreholes, soil matric potential will also be measured at selected depths along the vertical profile. Volumetric water content and temperature will be measured at multiple locations along a vertical profile, from land surface to approximately 5 ft above the water table (Figure 7), through use of water content sensors, which provide consistent estimates of temperature and VWC. Soil matric potential will be measured at three locations at each of three instrumented boreholes (Baseline, Basin 2 and Basin 8; Figure 8), through use of advanced tensiometers (ATs). Advanced tensiometers will be used to determine differences in matric potential (gradients) across the subsurface which can then be used to indirectly calculate groundwater recharge rates.

3.0 MONITORING PERIOD AND DATA MANAGEMENT

Monitoring equipment will be installed as soon as possible after construction of the basins. The project site will be monitored for a minimum of one year. Data will be downloaded at least quarterly (Appendix A) and, if needed, instrument repair and maintenance will occur within two weeks of data quality assurance. Following quarterly data collection, observed infiltration rates will be evaluated; if observed infiltration rates have fallen below a threshold limit (for example, less than six inches per day), Cochise County staff will be notified of the need for basin maintenance (i.e. sediment removal and/or scarification, as specified in the Operation Plan).

The following monitoring metrics will be calculated for the surface water detention basin, the in-channel recharge basins, and the improved in-channel basins (with dry wells and infiltration trenches):

- Estimated volume of surface water flow
- Estimated volume of infiltration
- Estimated evaporative depths and volumes
- Estimated recharge rate and volume of recharge per acre and/or per linear foot
- Estimated additional recharge resulting from alternative technologies (single-chamber dry wells, dual-chamber dry wells and trenches)
- Estimated cost per acre-foot of recharge
- Relationship between precipitation and surface water flow into the detention and recharge basins, correlation of real data to modeled precipitation-runoff estimates

For the above items, incremental increases obtained from the dry wells and infiltration trenches will be calculated. Additionally, data collected as part of the monitoring plan will be used to:

- Evaluate the relationship between precipitation and surface water flow into the detention basins and recharge basins
- Correlate observed data to modeled precipitation-runoff estimates (GSA, 2013b)
- Compare soil conditions for those areas affected by recharge to those upstream from project activities

Interim data summaries will be provided to the Project Team on a quarterly basis following data collection; data summaries will include a brief overview of the project status, events, and recommendations (including maintenance recommendations). Draft Annual Reports will be submitted to the Project Team at the end of each one-year monitoring period; a Final Report will be submitted within one month of receipt of comments from the Project Team.

Data will be collected, and quality assurance conducted in accordance with Standard Operating Procedures for Data Quality Assurance. All field data will be recorded in field logs and on field sheets, as appropriate. All field notes will be converted to an electronic format (PDF files). Automated data will be uploaded to an Excel or Access database, as appropriate. Interpretation and analysis of data will be clearly documented in the Annual Reports; all data and associated interpretations will be provided to the Project Team in electronic format, as an appendix to Annual Reports.

4.0 REFERENCES

JE Fuller Hydrology & Geomorphology, Inc. 2013. *Palominas Area Recharge and Flood Control Project – Phase 3 Alternatives Investigation.* Submitted to Cochise County Highway and Floodplain Department, Floodplain Division. May 24, 2013.

Rice, Robert. 2013. Personal communication, GeoSystems Analysis, Inc. project notes. March 2013.

GeoSystems Analysis, Inc. 2013a. *Mansker Site Initial Recharge Field Investigation Summary.* Prepared for JE Fuller Hydrology & Geomorphology and Cochise County. January 29, 2013.

GeoSystems Analysis, Inc. 2013b. *Proposed Mansker Flood Control/Recharge Site Stormwater Runoff Modeling.* Prepared for JE Fuller Hydrology & Geomorphology and Cochise County. January 29, 2013.

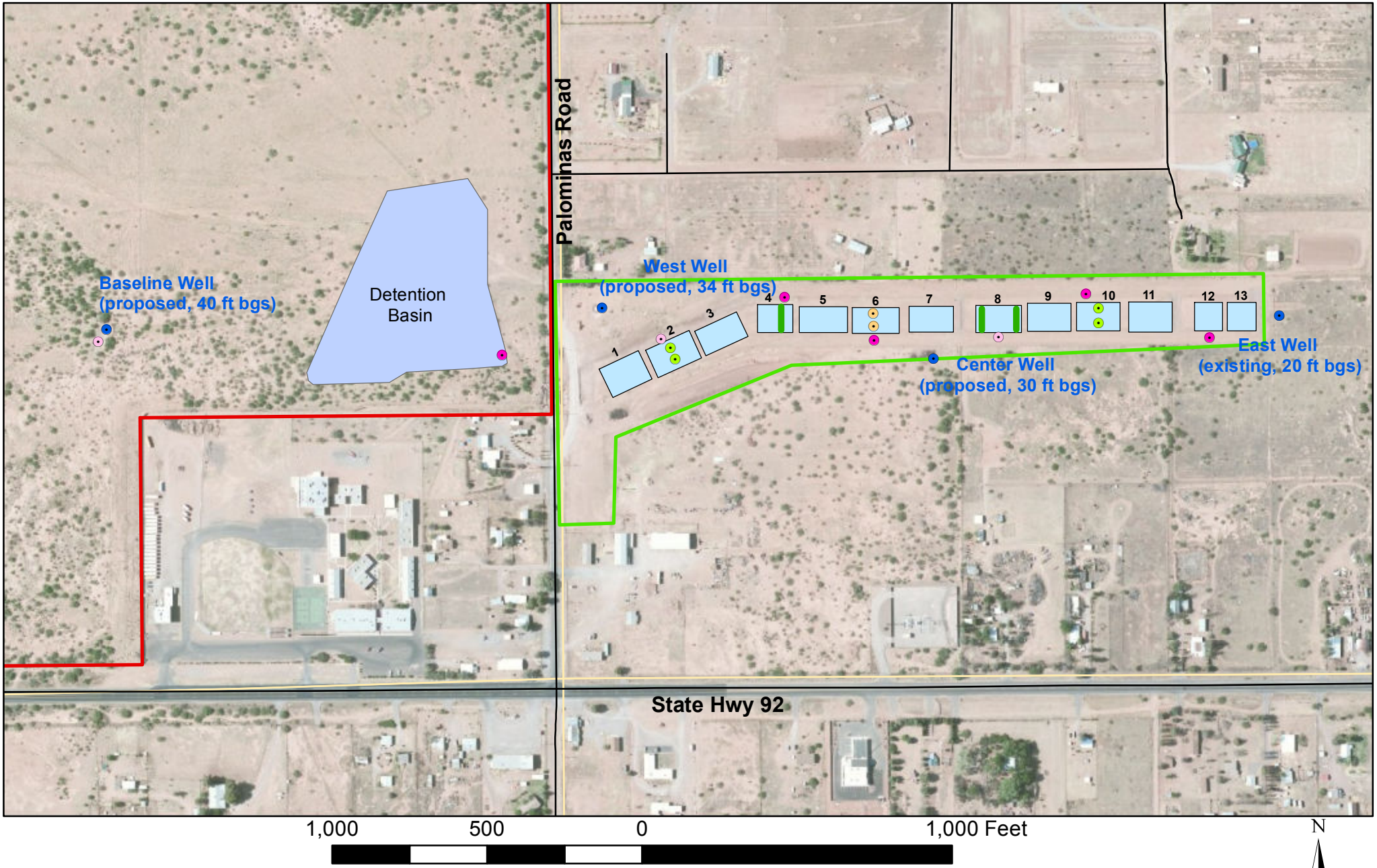

Legend

- Upstream parcel
- Drainage channel
- Section boundaries
- Major roads
- Monitoring Wells (recent water level)
- Single-chambered dry well
- Dual-chambered dry well
- Level 1 instrumented borehole
- Level 2 instrumented borehole
- Detention basin
- In-channel basin (basin number shown above)
- Infiltration trench

GSA GeoSystems Analysis, Inc. Innovations in Hydrology

Figure 1. Proposed Monitoring Plan for Palominas Flood Control and Recharge Facility

The MaxWell® IV Drainage System Detail And Specifications

ITEM NUMBERS

1. **MANHOLE CONE** - MODIFIED FLAT BOTTOM.
2. **MOISTURE MEMBRANE** - 6 MIL. PLASTIC. APPLIES ONLY WHEN NATIVE MATERIAL IS USED FOR BACKFILL. PLACE MEMBRANE SECURELY AGAINST ECCENTRIC CONE AND HOLE SIDEWALL.
3. **BOLTED RING & GRATE** - DIAMETER AS SHOWN. CLEAN CAST IRON WITH WORDING **"STORM WATER ONLY"** IN RAISED LETTERS. **BOLTED IN 2 LOCATIONS** AND SECURED TO CONE WITH MORTAR. RIM ELEVATION ±0.02' OF PLANS.
4. **GRADED BASIN OR PAVING** (BY OTHERS).
5. **COMPACTED BASE MATERIAL** - 1 SACK SLURRY EXCEPT IN LANDSCAPED INSTALLATIONS WITH NO PIPE CONNECTIONS.
6. **PUREFLO® DEBRIS SHIELD** - ROLLED 16 GA. STEEL X 24" LENGTH WITH VENTED ANTI-SIPHON AND INTERNAL .265" MAX. SWO FLATTENED EXPANDED STEEL SCREEN X 12" LENGTH. **FUSION BONDED EPOXY COATED.**
7. **PRE-CAST LINER** - 4000 PSI CONCRETE 48" ID. X 54" OD. **CENTER IN HOLE** AND ALIGN SECTIONS TO **MAXIMIZE BEARING SURFACE**.
8. **MIN. 6' Ø DRILLED SHAFT**.
9. **SUPPORT BRACKET** - FORMED 12 GA. STEEL. **FUSION BONDED EPOXY COATED**.
10. **OVERFLOW PIPE** - SCH. 40 PVC MATED TO DRAINAGE PIPE AT BASE SEAL.
11. **DRAINAGE PIPE** - ADS HIGHWAY GRADE WITH TRI-A COUPLER. SUSPEND PIPE DURING BACKFILL OPERATIONS TO PREVENT BUCKLING OR BREAKAGE. DIAMETER AS NOTED.
12. **BASE SEAL** - GEOTEXTILE OR CONCRETE SLURRY.
13. **ROCK** - WASHED, SIZED BETWEEN 3/8" AND 1-1/2" TO **BEST COMPLEMENT SOIL CONDITIONS**.
14. **FLOFAST® DRAINAGE SCREEN** - SCH. 40 PVC 0.120" SLOTTED WELL SCREEN WITH 32 SLOTS PER ROW/FT. 120" OVERALL LENGTH WITH TRI-B COUPLER.
15. **MIN. 4' Ø SHAFT** - DRILLED TO **MAINTAIN PERMEABILITY** OF DRAINAGE SOILS.
16. **FABRIC SEAL** - U.V. RESISTANT GEOTEXTILE - **TO BE REMOVED BY CUSTOMER** AT PROJECT COMPLETION.

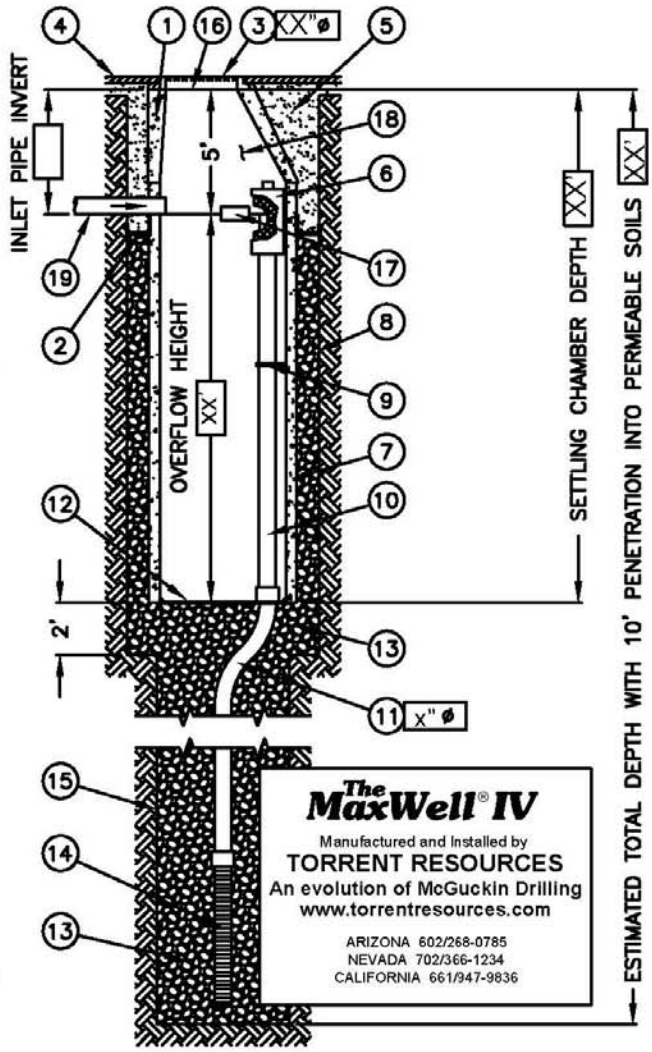

AZ Lic. ROC070465 A, ROC047067 B-4, ADWR 363
CA Lic. 528080, C-42, HAZ.
NV Lic. 0036350 A - NM Lic. 90504 GF04

U.S. Patent No. 4,923,330 - ™ Trademark 1974, 1990, 2004

17. **ABSORBENT** - HYDROPHOBIC PETROCHEMICAL SPONGE. MIN. 128 OZ. CAPACITY.
18. **FREEBOARD DEPTH** VARIES WITH INLET PIPE ELEVATION. INCREASE SETTLING CHAMBER DEPTH AS NEEDED TO MAINTAIN ALL INLET PIPE ELEVATIONS ABOVE OVERFLOW PIPE INLET.
19. **OPTIONAL INLET PIPE** (MAXIMUM 4", BY OTHERS). EXTEND MOISTURE MEMBRANE AND COMPACTED BASE MATERIAL OR 1 SACK SLURRY BACKFILL BELOW PIPE INVERT.

Figure 2A. Design schematic for typical single-chambered dry well (Provided by Torrent Resources)

The MaxWell® Plus Drainage System Detail And Specifications

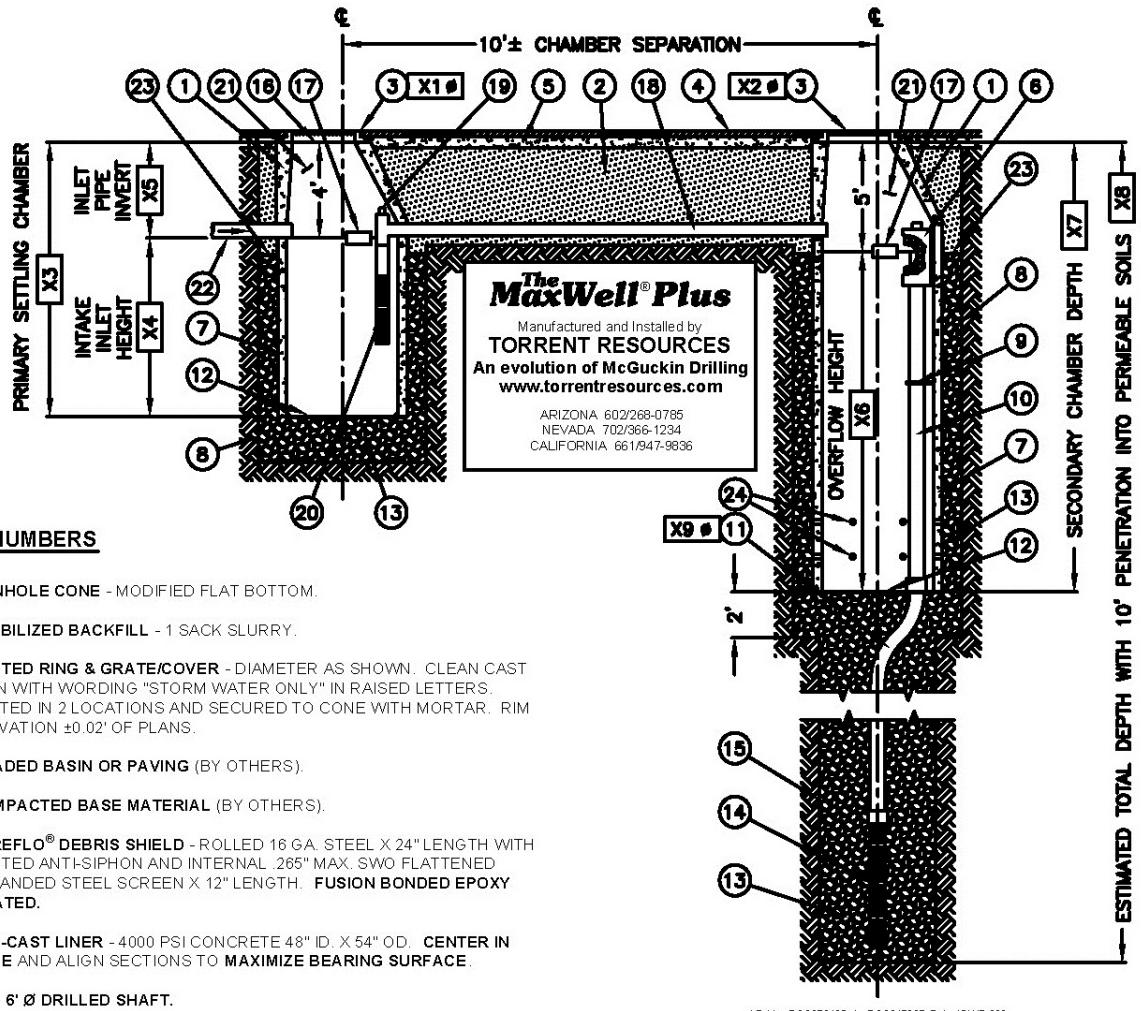

ITEM NUMBERS

1. **MANHOLE CONE** - MODIFIED FLAT BOTTOM.
2. **STABILIZED BACKFILL** - 1 SACK SLURRY.
3. **BOLTED RING & GRATE/COVER** - DIAMETER AS SHOWN. CLEAN CAST IRON WITH WORDING "STORM WATER ONLY" IN RAISED LETTERS. BOLTED IN 2 LOCATIONS AND SECURED TO CONE WITH MORTAR. RIM ELEVATION ±0.02' OF PLANS.
4. **GRADED BASIN OR PAVING** (BY OTHERS).
5. **COMPACTED BASE MATERIAL** (BY OTHERS).
6. **PUREFLO® DEBRIS SHIELD** - ROLLED 16 GA. STEEL X 24" LENGTH WITH VENTED ANTI-SIPHON AND INTERNAL .265" MAX. SWO FLATTENED EXPANDED STEEL SCREEN X 12" LENGTH. **FUSION BONDED EPOXY COATED.**
7. **PRE-CAST LINER** - 4000 PSI CONCRETE 48" ID. X 54" OD. **CENTER IN HOLE** AND ALIGN SECTIONS TO **MAXIMIZE BEARING SURFACE**.
8. **MIN. 6' Ø DRILLED SHAFT.**
9. **SUPPORT BRACKET** - FORMED 12 GA. STEEL. **FUSION BONDED EPOXY COATED**.
10. **OVERFLOW PIPE** - SCH. 40 PVC MATED TO DRAINAGE PIPE AT BASE SEAL.
11. **DRAINAGE PIPE** - ADS HIGHWAY GRADE WITH TRI-A COUPLER. **SUSPEND PIPE** DURING BACKFILL OPERATIONS TO PREVENT BUCKLING OR BREAKAGE. DIAMETER AS NOTED.
12. **BASE SEAL** - GEOTEXTILE OR CONCRETE SLURRY.
13. **ROCK** - WASHED, SIZED BETWEEN 3/8" AND 1-1/2" TO **BEST COMPLEMENT SOIL CONDITIONS**.
14. **FLOFAST® DRAINAGE SCREEN** - SCH. 40 PVC 0.120" SLOTTED WELL SCREEN WITH 32 SLOTS PER ROW/FT. DIAMETER VARIES 120" OVERALL LENGTH WITH TRI-B COUPLER.
15. **MIN. 4' Ø SHAFT** - DRILLED TO **MAINTAIN PERMEABILITY** OF DRAINAGE SOILS.
16. **FABRIC SEAL** - U.V. RESISTANT GEOTEXTILE - **TO BE REMOVED BY CUSTOMER** AT PROJECT COMPLETION.
17. **ABSORBENT** - HYDROPHOBIC PETROCHEMICAL SPONGE. MIN. 128 OZ. CAPACITY.
18. **CONNECTOR PIPE** - 4" Ø SCH. 40 PVC .
19. **ANTI-SIPHON VENT** WITH FLOW REGULATOR.
20. **INTAKE SCREEN** - SCH. 40 PVC 0.120" MODIFIED SLOTTED WELL SCREEN WITH 32 SLOTS PER ROW/FT. 48" OVERALL LENGTH WITH TRI-C END CAP.
21. **FREEBOARD DEPTH VARIES** WITH INLET PIPE ELEVATION. INCREASE PRIMARY/SECONDARY SETTLING CHAMBER DEPTHS AS NEEDED TO MAINTAIN ALL INLET PIPE ELEVATIONS ABOVE CONNECTOR PIPE OVERFLOW.
22. **OPTIONAL INLET PIPE** (BY OTHERS).
23. **MOISTURE MEMBRANE** - 6 MIL. PLASTIC. PLACE SECURELY AGAINST ECCENTRIC CONE AND HOLE SIDEWALL. USED IN LIEU OF SLURRY IN LANDSCAPED AREAS.
24. **EIGHT (8) PERFORATIONS PER FOOT**, 2 ROWS MIN.

Figure 2B. Design schematic for typical dual-chambered dry well (Provided by Torrent Resources)

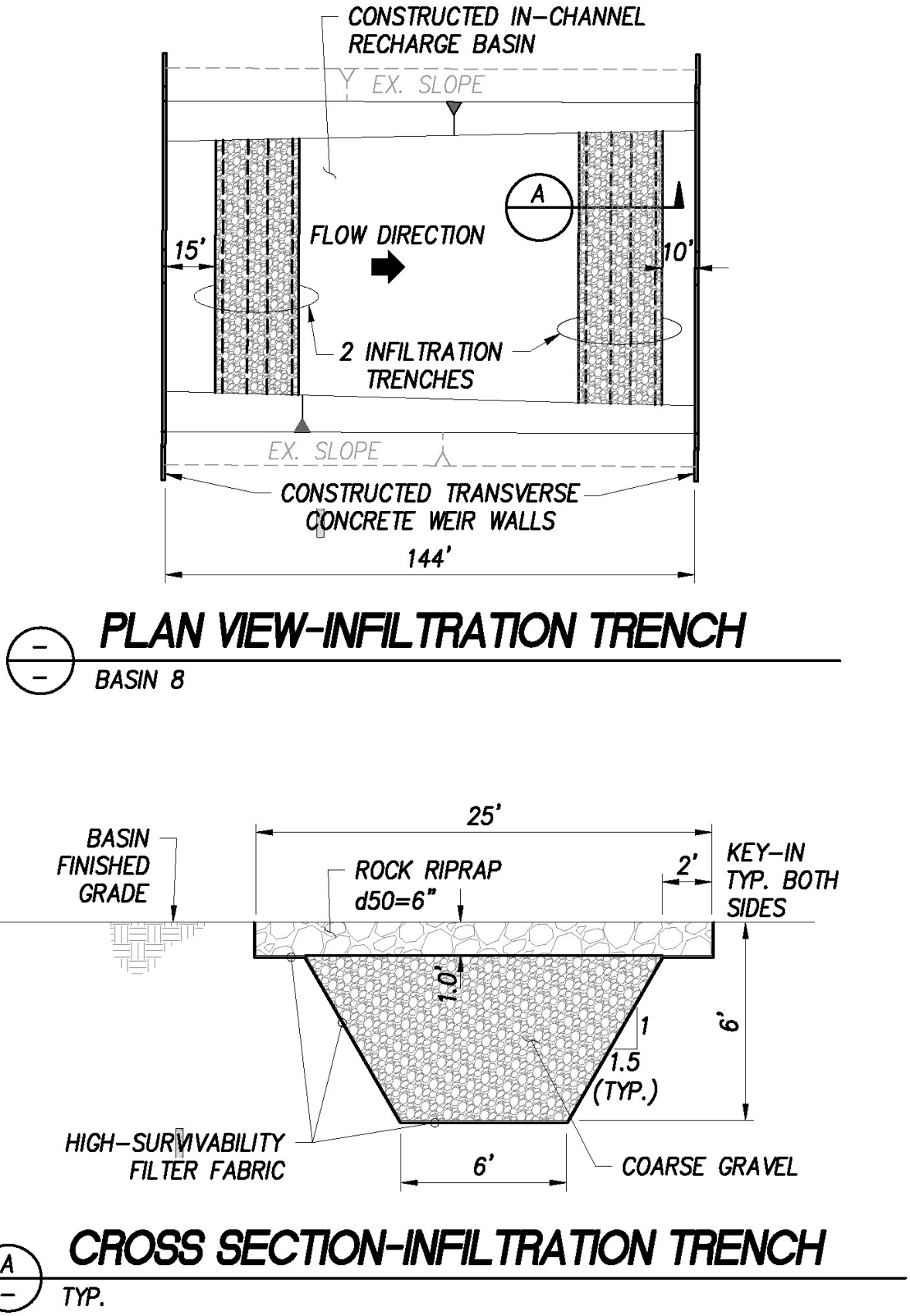

Figure 3. Design schematic for typical infiltration trench (Provided by JE Fuller/Hydrology & Geomorpholgy, Inc.)

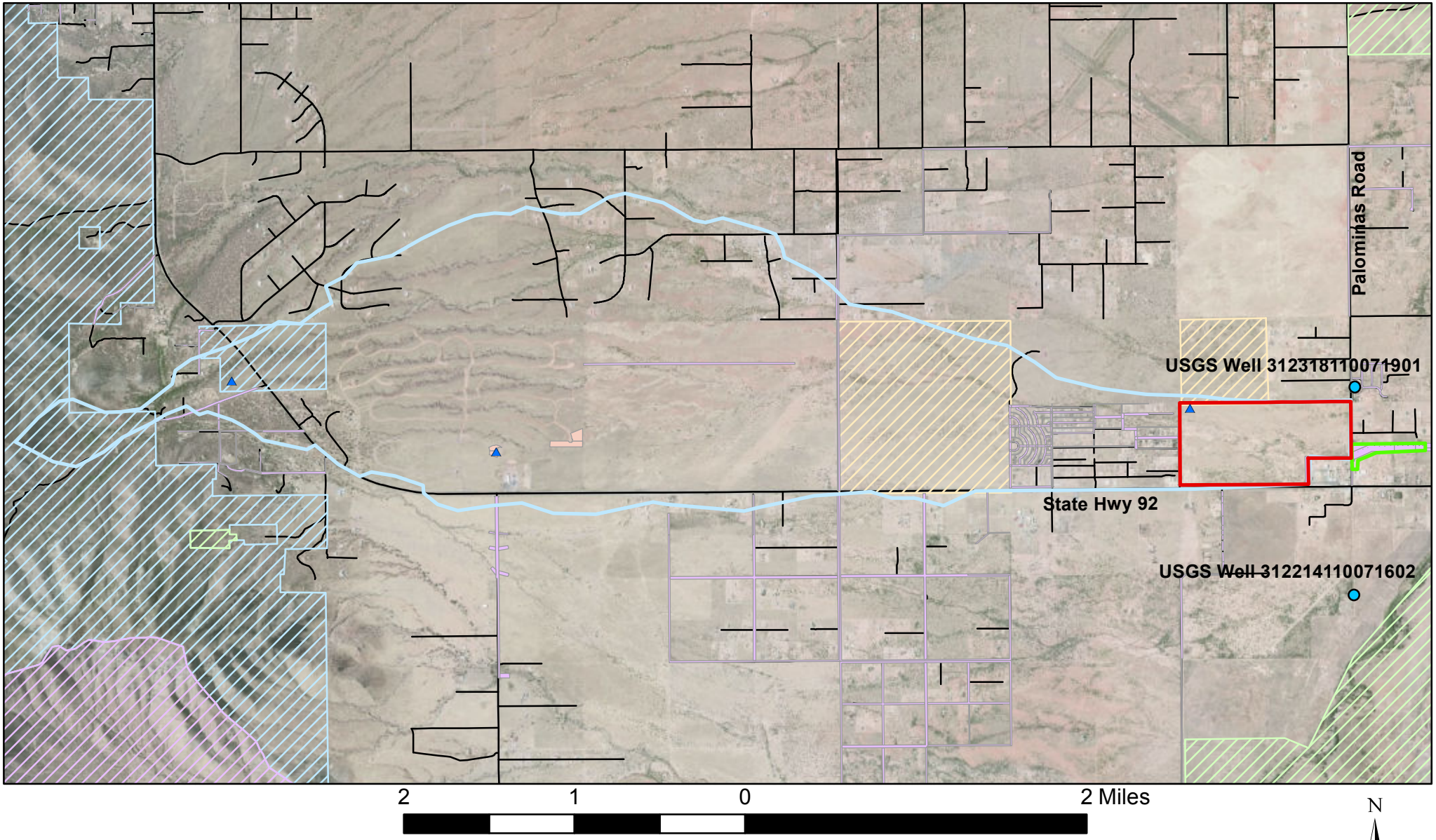

Legend

- Palominas Flood Control and Recharge Facility
- Drainage Channel
- Palominas Watershed
- Major Roads
- County parcels
- County right-of-way

Landowner

- BLM
- Coronado National Forest
- Coronado National Monument
- State Trust

- Precipitation Gage
- USGS Monitoring Wells

GSA GeoSystems Analysis, Inc. Innovations in Hydrology

Figure 4. Precipitation Gages and USGS Wells

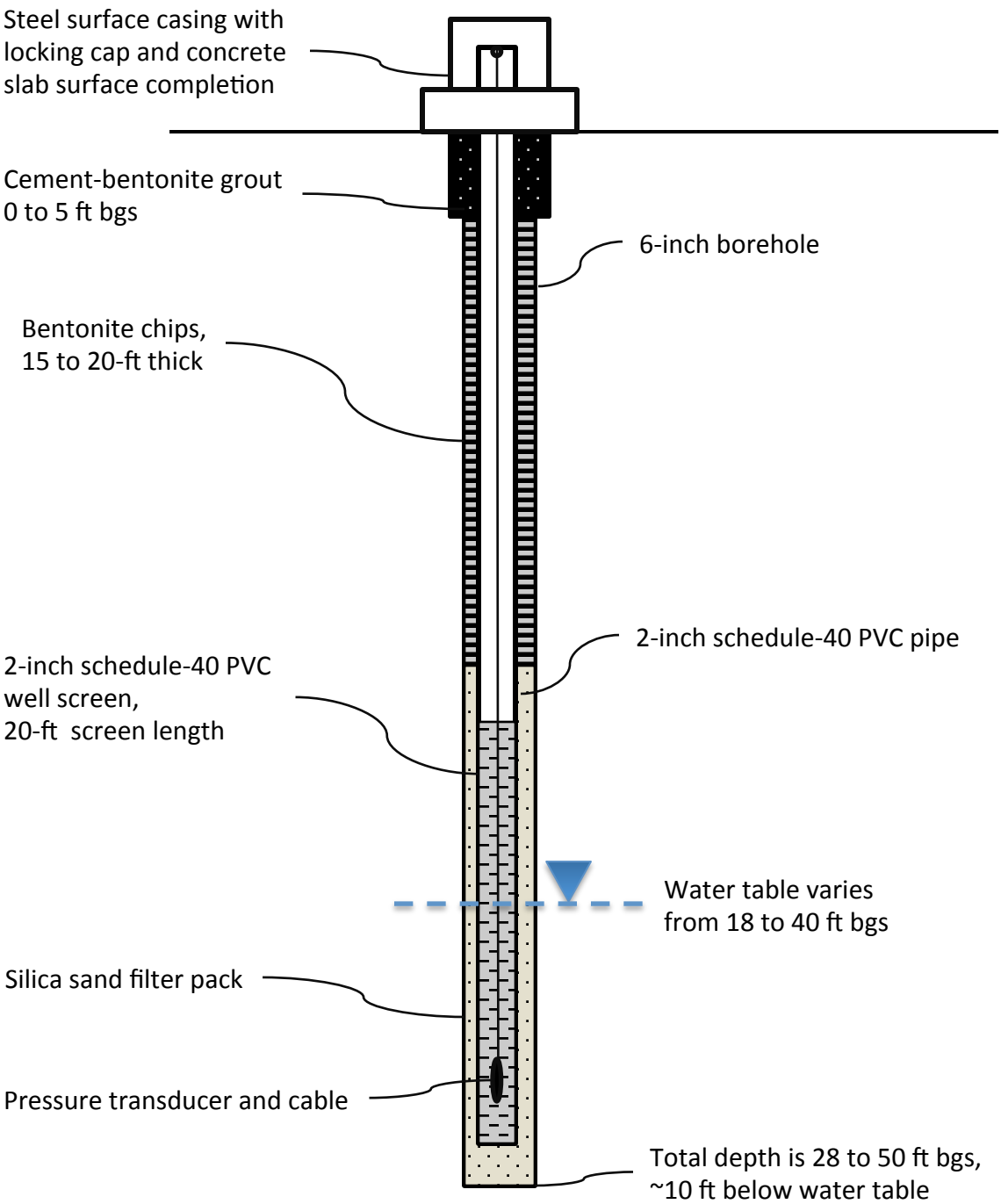

Figure 5
Schematic diagram of groundwater monitoring wells

Prepared for:

Prepared by:

Concrete weir wall, view from upstream basin looking downstream. Drawing not to scale. (See 65% design plans by JEFuller for more detail of concrete walls.)

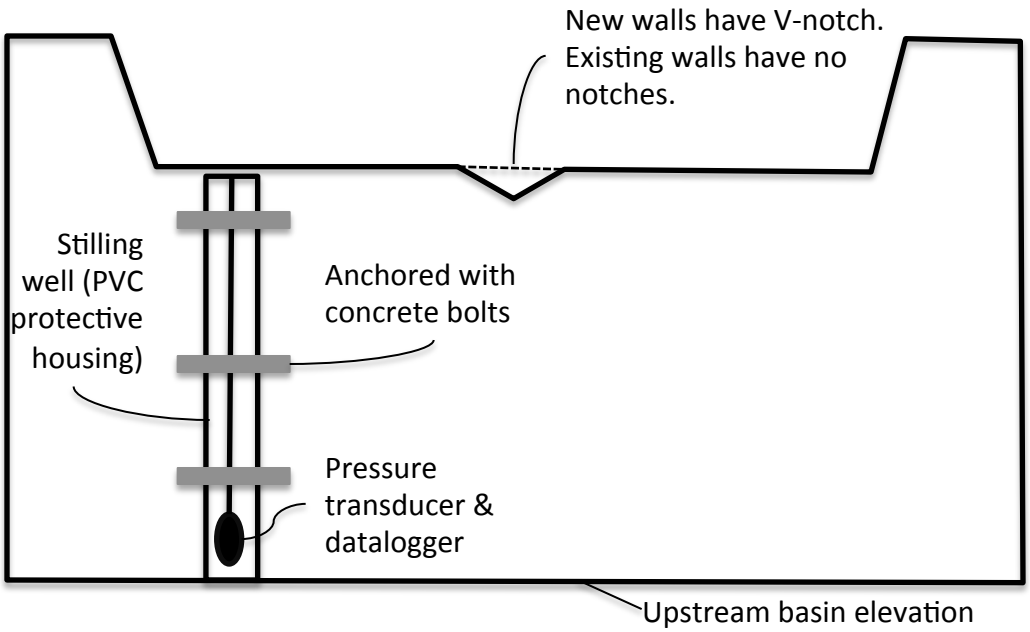

Figure 6
Schematic of stilling well at in-channel basins

Prepared for:

Prepared by:

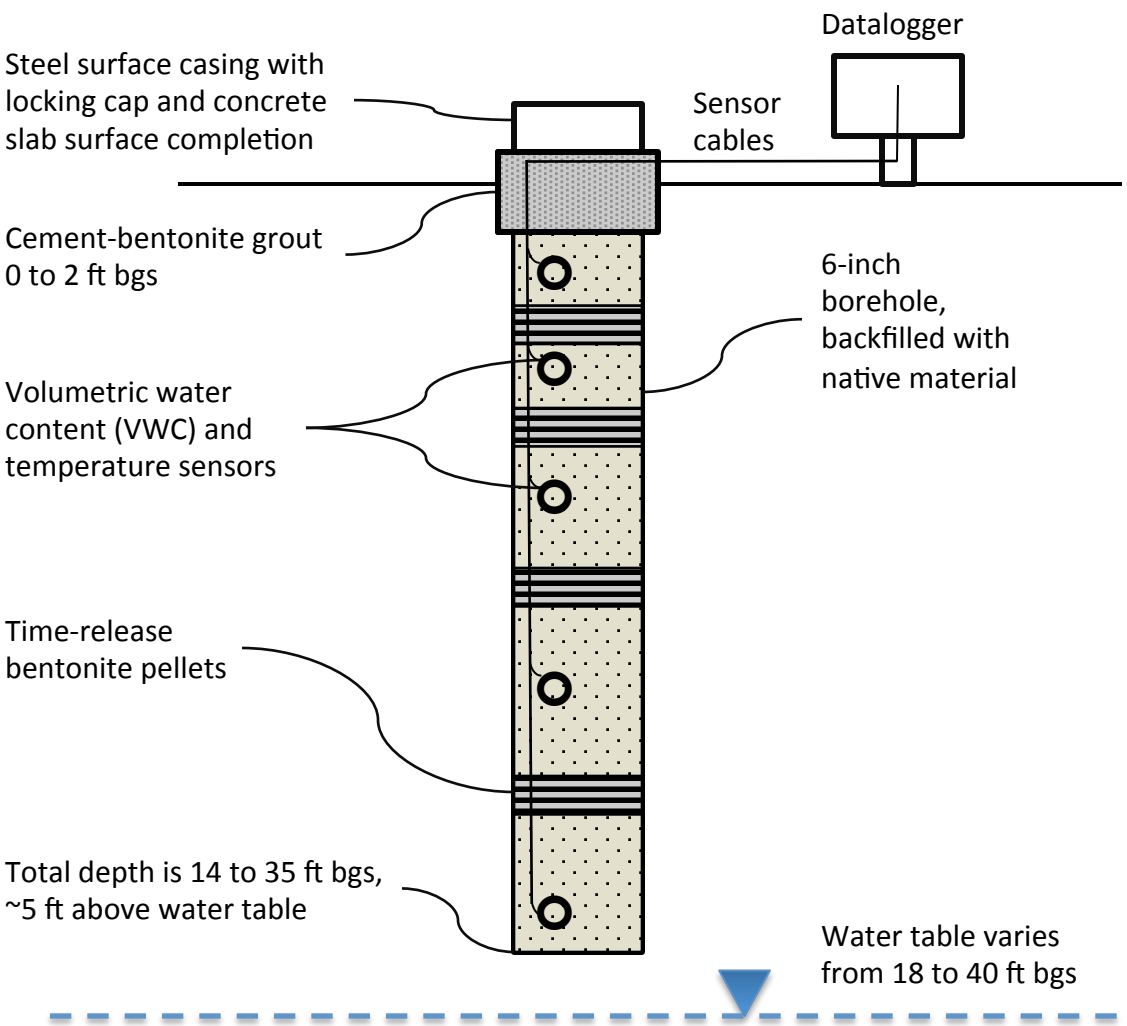

Estimated probe depths for instrumented boreholes, in ft bgs.							
Baseline	**Detention Basin**	**Basin 2**	**Basin 4**	**Basin 6**	**Basin 8**	**Basin 10**	**Basin 12**
Level 2	Level 1	Level 2	Level 1	Level 1	Level 2	Level 1	Level 1
3	3	3	3	3	3	3	3
6	6	6	6	6	6	6	6
10	10	10	10	10	10	10	10
20	20	20	20	16	16	15	12
35	30	29	29	25	25	21	14

VWC and temperature measured at all depths; matric potential measured at depths highlighted in grey.

Figure 7
Schematic diagram of Level 1 instrumented boreholes

Prepared for:

Prepared by:

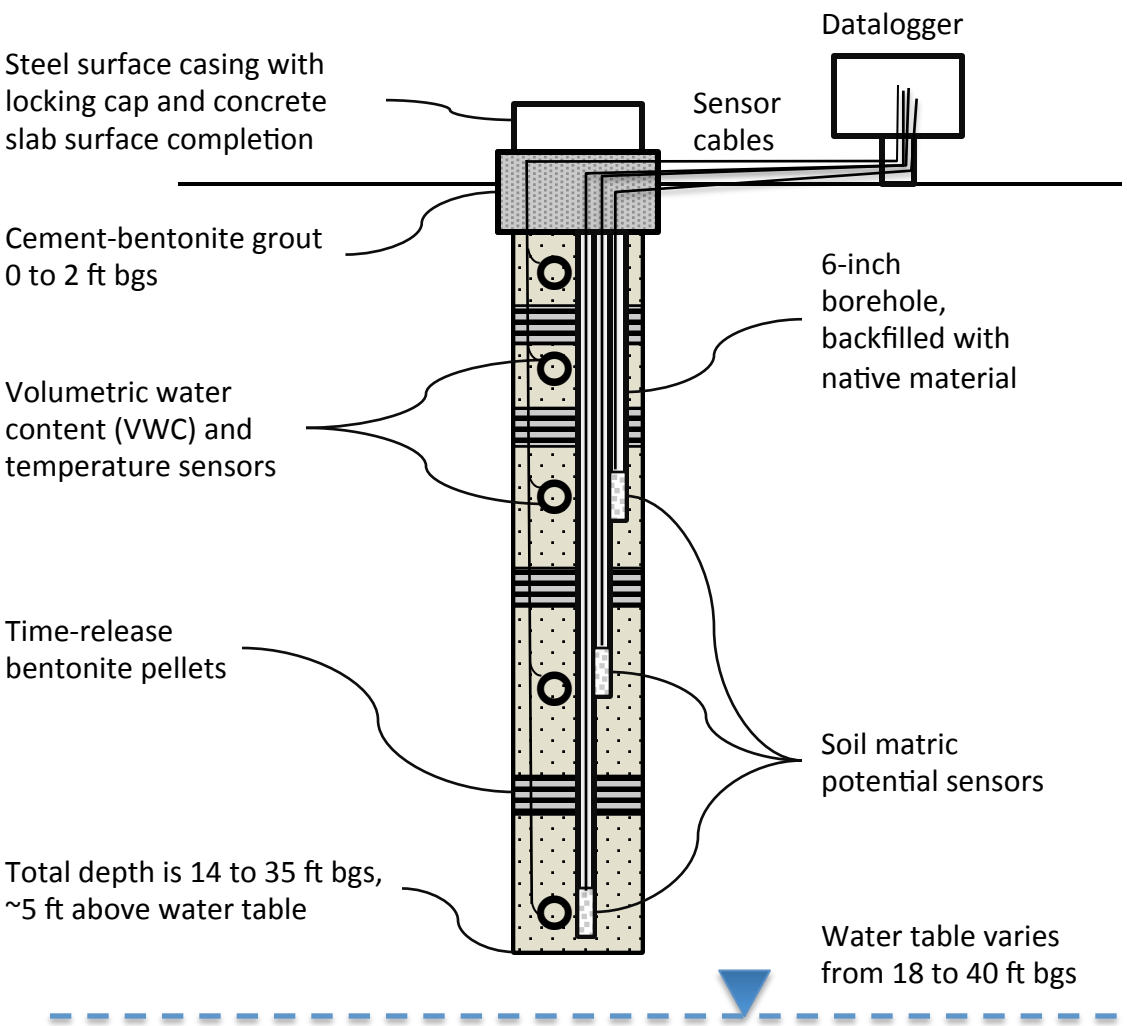

Estimated probe depths for instrumented boreholes, in ft bgs.							
Baseline	**Detention Basin**	**Basin 2**	**Basin 4**	**Basin 6**	**Basin 8**	**Basin 10**	**Basin 12**
Level 2	Level 1	Level 2	Level 1	Level 1	Level 2	Level 1	Level 1
3	3	3	3	3	3	3	3
6	6	6	6	6	6	6	6
10	10	10	10	10	10	10	10
20	20	20	20	16	16	15	12
35	30	29	29	25	25	21	14

VWC and temperature measured at all depths; matric potential measured at depths highlighted in grey.

Figure 8
Schematic diagram of Level 2 instrumented boreholes

Prepared for:

Prepared by:

Appendix A. Monitoring equipment, objectives, and measurement frequency for the proposed monitoring plan

Location type	Location	Device	Objective	Total number of devices	Automated measurements	Site visit & data download
Groundwater	Monitoring wells	Pressure transducers	Measure water levels	3	4 times per day	At least 4 times per year
Surface Water	Stilling Wells	Pressure transducers	Quantify flow into and out of each basin	14	15-minute intervals	At least 4 times per year, including once every 6 months and twice during monsoon season
Vadose Zone	Dry Wells	Pressure transducers	Measure changes in pressure head throughout infiltration events	6	15-minute intervals	
Vadose Zone	Infiltration Trenches	Pressure transducers	Measure changes in pressure head throughout infiltration events	3	15-minute intervals	
Vadose Zone	Level 1 Instrumented Boreholes	Water content sensors	Measure changes in volumetric water content (VWC) and temperature	25	4 times per day	
Vadose Zone	Level 2 Instrumented Boreholes	Water content sensors	Measure changes in volumetric water content (VWC) and temperature	15	4 times per day	
Vadose Zone	Level 2 Instrumented Boreholes	Advanced tensiometer	Measure changes in matric potential to calculate GW recharge rates	9	4 times per day	

** Standard Operating Procedures to be included in the Instrumentation Report.